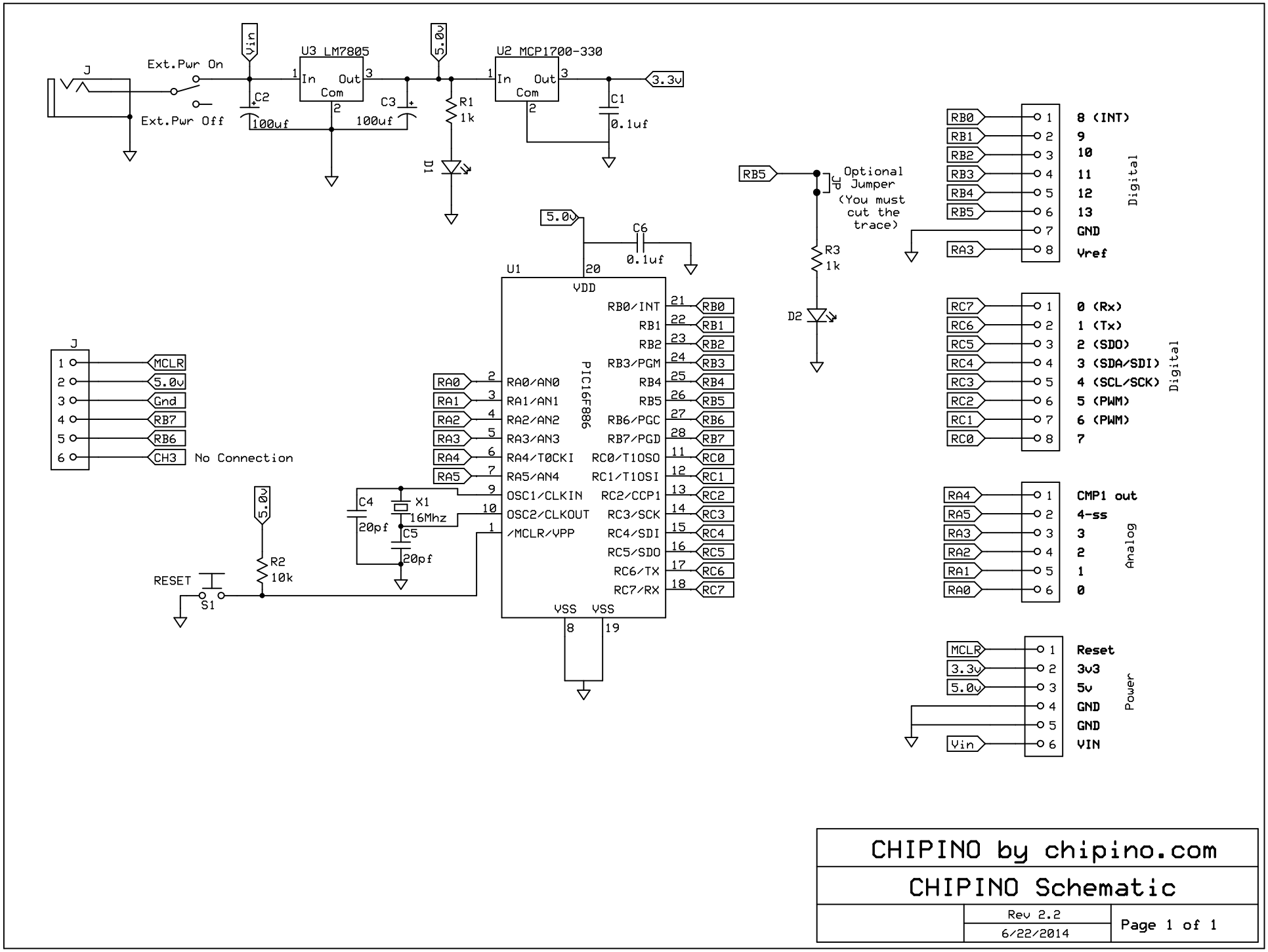

CHIPINO by chipino.com		
CHIPINO Schematic		
	Rev 2.2 6/22/2014	Page 1 of 1